C'2ms/ST

TECHNICAL DATA

Brew chamber	1 x 24 g (0.05 lb)		
Grinder	2 x Grinders (Ø 64 mm (2.5 in) burrs)		
Display	1 × Touch screen 400 mm (15.7") - 800 x 600 px		
Bean hopper	2 x 1.2 kg (2 x 2.6 lbs) or 1 x 2.4 kg (1 x 5.3 lbs) (option)		
Coffee outlet height*	Max. 165 mm (6.5 in)		
Hot water outlet height*	145 mm (5.7 in) or 195 mm (7.7 in) (option)		
Interfaces	1 x USB, 1 x SD-Card, 1 x Ethernet, 1 x CCI/CSI		
Cup heater	Up to 50 espresso cups		
Coffee boiler	0.8 L (27 fl oz)		
Steam boiler	1.6 L (54 fl oz)		
Grounds drawer	400 g (0.88 lb)		
	C'2C	**C'2S**	**C'2MS**
Weight	58 kg (128 lbs)	65 kg (143 lbs)	67 kg (148 lbs)

* measured from the drip tray

OPERATING CONDITIONS

Operating Temperature	10 to 32 °C (50 to 90 °F)
Storage & transport temperature (empty boiler)	10 to 50 °C (50 to 122 °F)
Long term storage (> 6 months) (empty boiler)	5 to 50 °C (41 to 122 °F)
Relative Humidity (RH), no condensing (storage, transport and operating)	5 to 80 % RH
Transient over-voltage	Category II

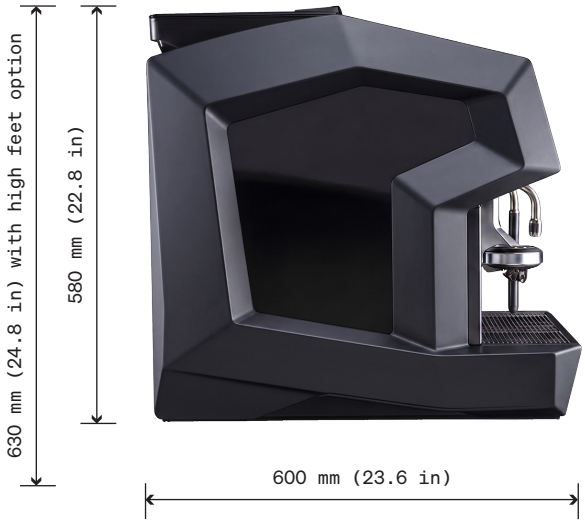

WATER REQUIREMENTS

Total hardness	5 to 8° dGH (89 to 142 ppm)
Carbonate hardness	Max. 6° dKH (107 ppm)
pH value	Ideal 7.0 to 7.2
Chlorine value	Max. 0.1 mg/L (0.1 ppm)
Inlet hose	Inox braided pipe G3/8" female x 2 m (78.7 in)
Drain hose	Ø 22 mm x Ø 16 mm x 2 m (0.9 x 0.6 x 78.7 in)
Siphon inlet	min. Ø 56 mm (2.2 in)
Pressure	2.5 to 4 bar (36.3 to 58 psi). If the pressure exceeds 4 bar (58 psi), it is necessary to install a pressure reducer.
Flow rate	To avoid damage to the water pump, a water flow rate of at least 2.4 L/min (0.5 gal (UK)/min) | 140 L/h (30.8 gal (UK)/h) must be ensured at the water inlet of the machine.

© Eversys S.A. | SAP 5700109488-V3.0 - 06.08.2026 | techsupport@eversys.com | +41 27 588 00 17 | www.eversys.com

ELECTRICAL INFORMATION

Power consumption (standby mode)	Less than 2 W

CAMEO ST

COUNTRY	ELECTRICAL VERSION	POWER SUPPLIES	C'2C	C'2S	C'2MS
China	W2	1/N/PE, 220-240V~, 50/60Hz, 16A	2500 W	2800 W	2800 W
	W3	1/N/PE, 220-240V~, 50/60Hz, 25A	-	5600 W	5600 W
	W4	3/N/PE, 380-415V~, 50/60Hz, 16A	-	8100 W	8100 W
Japan	J1	2/PE, 200V~, 50/60Hz, 12A	1900 W	2100 W	2100 W
	J3	2/PE, 200V~, 50/60Hz, 30A	-	6000 W	6000 W
	J4	3/N/PE, 200V~, 50/60Hz, 20A	-	4300 W	4300 W
Korea	K3	1/N/PE, 220V~, 60Hz, 16A	-	5200 W	5200 W
Israel	W2	1/N/PE, 220-240V~, 50/60Hz, 16A	2500 W	2800 W	2800 W
	W3	1/N/PE, 220-240V~, 50/60Hz, 25A	-	5600 W	5600 W
	W4	3/N/PE, 380-415V~, 50/60Hz, 16A	-	8100 W	8100 W
Rest of the world	W2	1/N/PE, 220-240V~, 50/60Hz, 16A	2500 W	2800 W	2800 W
	W3	1/N/PE, 220-240V~, 50/60Hz, 25A	-	5600 W	5600 W
	W4	3/N/PE, 380-415V~, 50/60Hz, 16A	-	8100 W	8100 W
	W5	3/PE, Δ 220-230V~, 50/60Hz, 20A	-	5600 W	5600 W
United Kingdom (UK)	W2	1/N/PE, 220-240V~, 50/60Hz, 16A	2500 W	2800 W	2800 W
	W3	1/N/PE, 220-240V~, 50/60Hz, 25A	-	5600 W	5600 W
	W4	3/N/PE, 380-415V~, 50/60Hz, 16A	-	8100 W	8100 W

PERFORMANCE (UP TO)	C'2C*	C'2S	C'2MS
Espresso / h (extraction time: 23 s)	175	175	175
Hot water / h (200 mL or 6.8 fl oz)	170	170	170
Cappuccino / h (extraction time: 23 s)	-	-	175
Adjustable hot water temperature	-	Yes	Yes
Everfoam (e'Foam)	-	Yes	Yes
Milk system with EMT (Electronic Milk Texturing)	-	-	Yes

*Coffee cannot be dispensed at the same time as hot water.

© Eversys S.A. | SAP 5700109488-V3.0 - 06.08.2026 | techsupport@eversys.com | +41 27 588 00 17 | www.eversys.com

IMPORTANCE OF THE SAFETY INSTRUCTIONS

In order to prevent accidents to persons, damage to equipment or pollution of the environment, you must comply with all the safety instructions in the manual and on the machine.
Observe the bylaws and the recognized technical rules which apply in the country of use of the machines.
It is imperative to read the Eversys General Safety Instructions (supplied with the machine) before carrying out any action on the machine. In case of unclear information, please contact your local service organization.

PREPARATORY WORK

- ☐ Have a flat and clean surface.
- ☐ Get a clean environment.
- ☐ Keep a space of min. 250 mm (9.8 in) above the machine.
- ☐ A stable support capable of supporting the weight of the machine plus an additional weight of 10 kg (22 lbs) including coffee beans, water, etc.
- ☐ Have a table height of at least 800 mm (31.5 in).
- ☐ Have a separate power lines for each machine.
- ☐ Have an electrical network protected by an RCD or RCCB.
- ☐ Water mains shutoff valve with a non-return valve (type EA or according to local regulation).
- ☐ Descaling cartridge or carbon filter as minimum.
- ☐ Install the machine with adequate backflow protection, in accordance with applicable federal, state or local plumbing codes.

INSTALLATION

Install the machine in accordance with the manufacturer's training and the information on the installation sheet supplied with the machine. Below you'll find a quick overview of how to connect the machine (drain, water and milk supply).

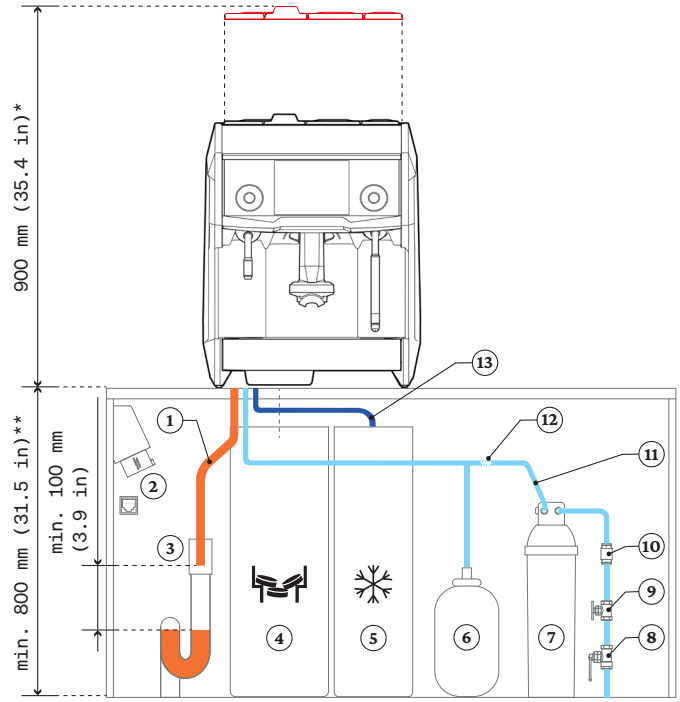

1. Drain hose – **Make sure that the drain hose outlet is placed on the siphon but not in contact with waste water. The hose must always flow downwards.**
2. Electrical socket according to local regulation and RJ-45 connection (e'Connect).
3. Drain with siphon, input min. Ø 56 mm (2.2 in). Execution according to EN 61770.
4. Undercounter grounds coffee disposal (option).
5. Fridge installed as close as possible to the machine (maximum 2 meters (78.7 in) hose length).
6. Pre-charged 2 bar expansion tank (option). In the event of a temporary drop in water pressure below 2 bar (29 psi).
7. Descaling cartridge or carbon filter as minimum.
8. Main water tap (required).
9. Pressure reducer (option). If water pressure exceeds 4 bar (58 psi).
10. Check valve according to local regulation.
11. Water supply hose G3/8" female.
12. Check valve (option). If using an expansion tank (6).
13. Milk tubes cut as short as possible.
14. Countertop cutout for cables and hoses.
15. Countertop cutout for the undercounter ground coffee disposal (option).
16. Machine water inlet 3/8".

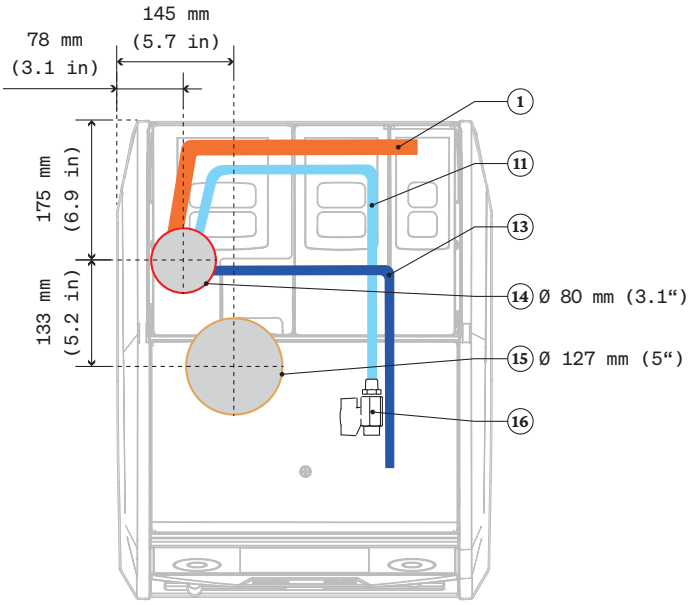

*** Minimum height required to refill / remove bean hopper.**
**** Depending on machine setup, height could vary.**

AFTER INSTALLATION

Explain to staff how to use and clean the machine, using the quick-start guide and cleaning sheet supplied with the machine.

To start the Eversys warranty period, please follow the instructions at the end of the installation wizard, or connect the machine to telemetry for a fully automated warranty start.

Your local distributor:

© Eversys S.A. | SAP 5700109488-V3.0 - 06.08.2026 | techsupport@eversys.com | +41 27 588 00 17 | www.eversys.com